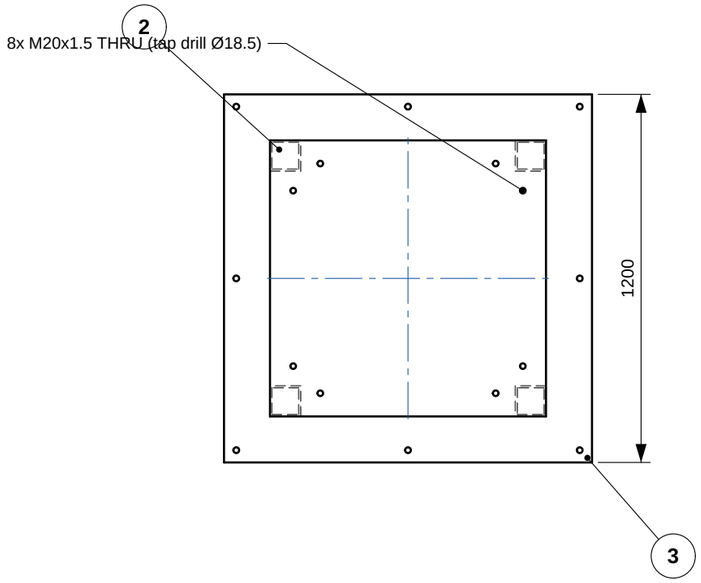

PLAN VIEW

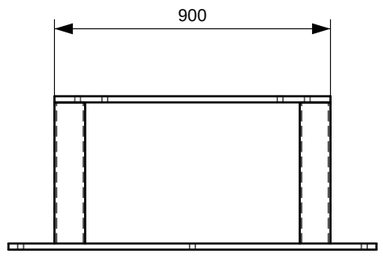

END VIEW (FROM LEFT)

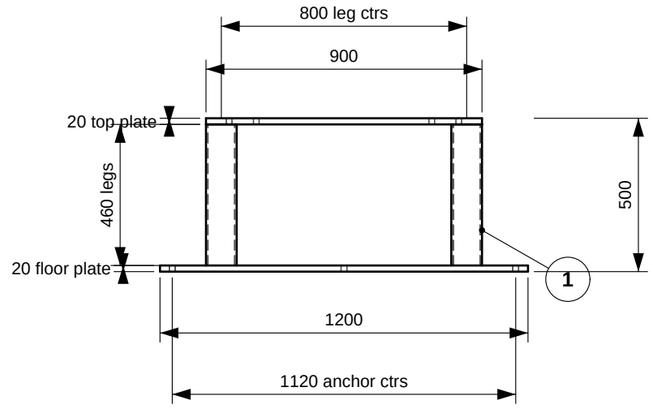

FRONT VIEW

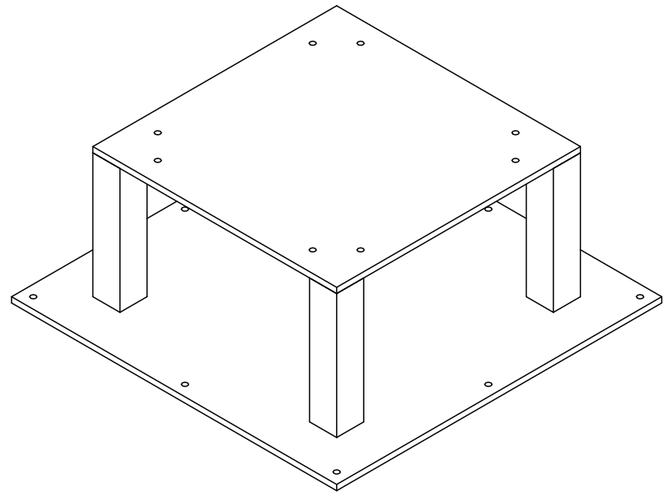

ISOMETRIC VIEW (NOT TO SCALE)

PARTS OF ASSEMBLY

ITEM	DESCRIPTION	SHEET	QTY
1	Leg 100 sq x 6.3 wall x 460 lg	sh 2	4
2	Top plate 900 sq x 20	sh 3	1
3	Floor plate 1200 sq x 20	sh 4	1

NOTES

1. Robot: KUKA KR 210 R2700 extra (selected in cell). Top plate holes: 8x M20x1.5 THRU (tap drill Ø18.5).
2. Floor anchors: 8x Ø19 THRU, 40 from the edge.
3. Welds: Fillet weld all round, size to suit; legs square to plates within 0.5 mm.
4. Finish: Powder coat RAL 9005 jet black, satin, all over after welding and machining. Mask the machined top face and tapped holes.
5. Height 500 = floor to robot mounting face. Legs 460 long, recalculated from the base height set in the cell builder.
6. All dimensions mm. Do not scale.
7. Detail of every item on the following sheets.
8. Geometry projected from the STEP model (same file).

PARAMETERS (from cell builder)

size	900
height	500
robot	KUKA KR 210 R2700 extra
robot id	kuka_kr210_r2700_extra

Path2

path2.io · generated from cell builder parameters

ROBOT PEDESTAL

GENERAL ARRANGEMENT

CONCEPT – VERIFY BEFORE MANUFACTURE

DRAWING NO	**P2-PEDESTAL-900X900X500**
SCALE	**1:20 @ A3**
UNITS	**mm Third angle**
FINISH	**RAL 9005 black powder coat**
DATE	**2026-11-26**
SHEET	**1 of 4**

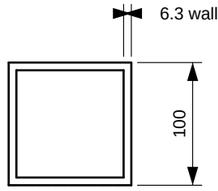

PLAN VIEW

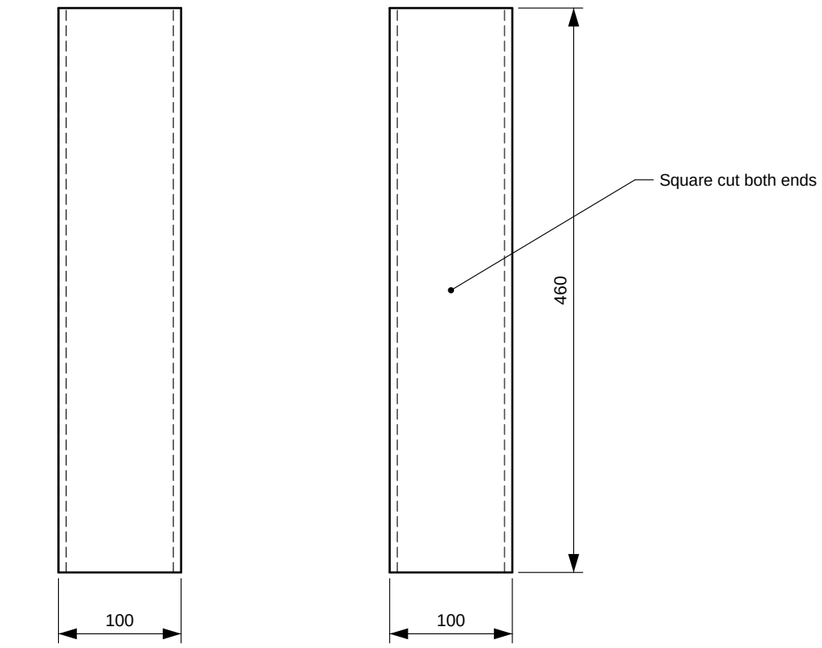

END VIEW (FROM LEFT) **FRONT VIEW**

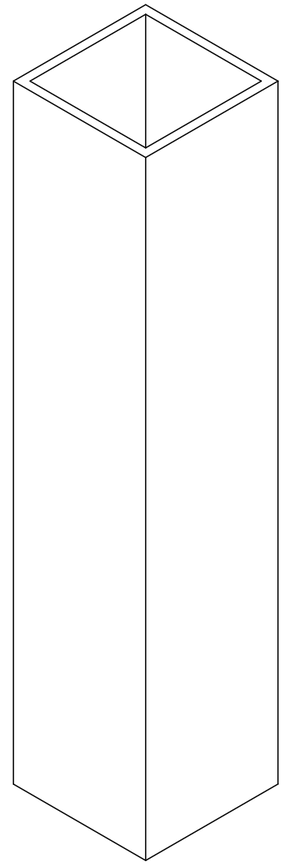

ISOMETRIC VIEW (NOT TO SCALE)

NOTES

1. Length = base height 500 - top plate 20 - floor plate 20.
2. Ends square to axis within 0.5 mm so the plates sit flat.
3. Cap or seal the open section before powder coat if specified.
4. Deburr all edges. Dimensions mm. Do not scale.
5. Powder coat after welding/machining; mask threads and machined faces.

QTY PER ASSEMBLY	4
STOCK	SHS 100x100x6.3
MATERIAL	S275JR steel (assumed)
FINISH	Powder coat RAL 9005 jet black, satin

Path2

path2.io · generated from cell builder parameters

ITEM 1: LEG 100 SQ X 6.3 WALL X 460 LG

Robot pedestal – detail

CONCEPT – VERIFY BEFORE MANUFACTURE

DRAWING NO	**P2-PEDESTAL-900X900X500/01**
SCALE	**1:5 @ A3**
UNITS	**mm Third angle**
FINISH	**RAL 9005 black**
DATE	**2026-11-26**
SHEET	**2 of 4**

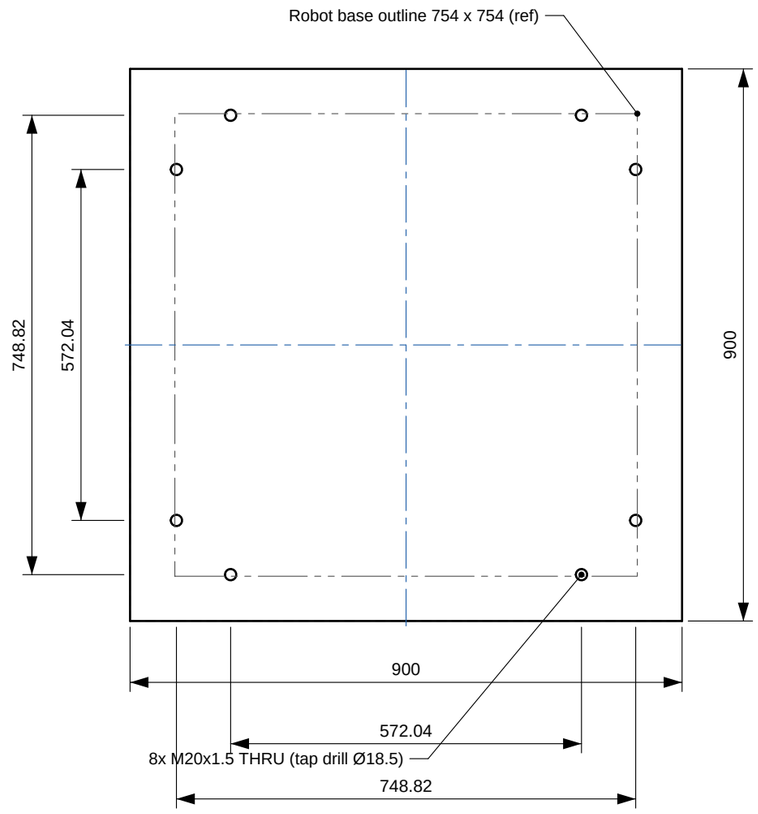

PLAN VIEW

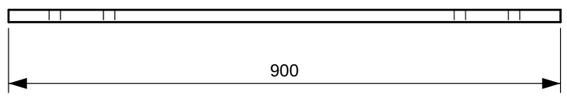

END VIEW (FROM LEFT)

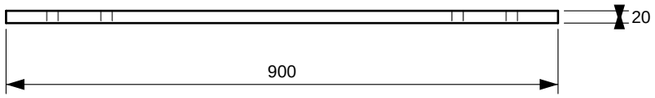

FRONT VIEW

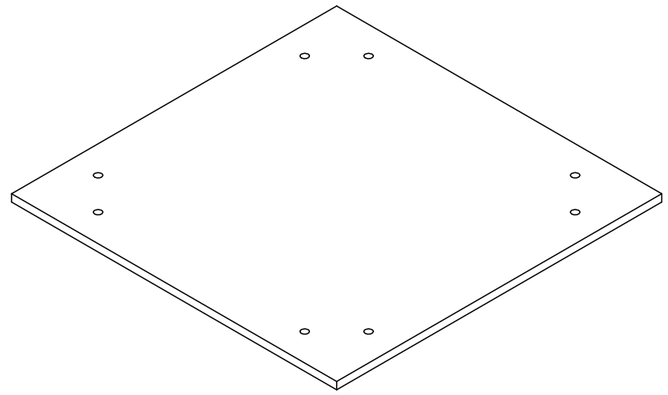

ISOMETRIC VIEW (NOT TO SCALE)

NOTES

1. Robot: KUKA KR 210 R2700 extra (from cell). Hole data: Fabricated robot plate drawing (1200x1000x20, mild steel), robot bolted direct: 8x M20x1.5-6H at 572.04 / 748.82 from the plate centre lines.
2. Top face machined flat after welding; flatness per robot datasheet.
3. Plate 20 thick, M20x1.5 tapped through.
4. Legs 100 sq at the four corners, flush with the plate edges.
5. Hole positions X,Y from robot centre: (374.41, 286.02); (286.02, 374.41); (-286.02, 374.41); (-374.41, 286.02); (-374.41, -286.02); (-286.02, -374.41); (286.02, -374.41); (374.41, -286.02)
6. Deburr all edges. Dimensions mm. Do not scale.
7. Powder coat after welding/machining; mask threads and machined faces.

QTY PER ASSEMBLY	1
STOCK	Plate 20 thk
MATERIAL	S275JR steel (assumed)
FINISH	Powder coat RAL 9005 jet black, satin

Path2 path2.io · generated from cell builder parameters

ITEM 2: TOP PLATE 900 SQ X 20

Robot pedestal – detail

CONCEPT – VERIFY BEFORE MANUFACTURE

DRAWING NO	**P2-PEDESTAL-900X900X500/02**
SCALE	**1:10 @ A3**
UNITS	**mm Third angle**
FINISH	**RAL 9005 black**
DATE	**2026-11-26**
SHEET	**3 of 4**

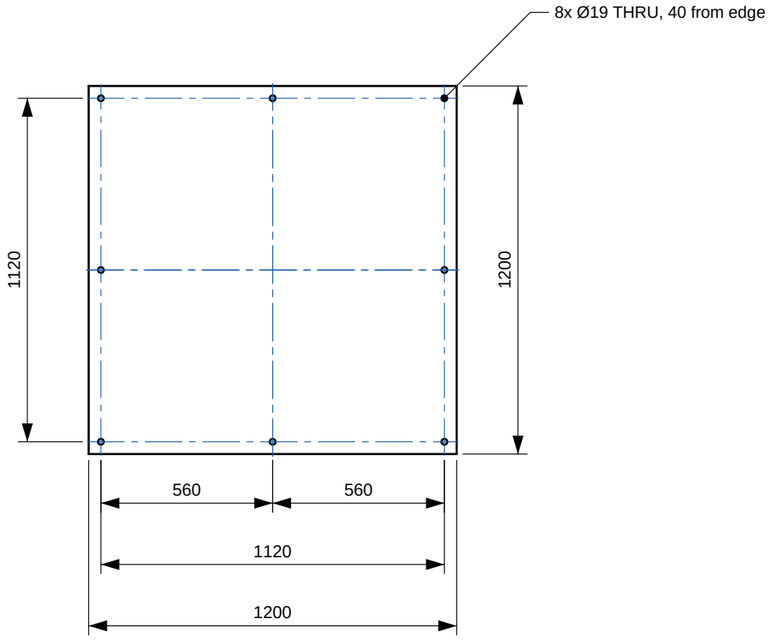

PLAN VIEW

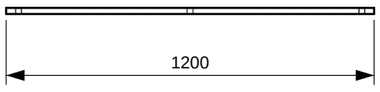

END VIEW (FROM LEFT)

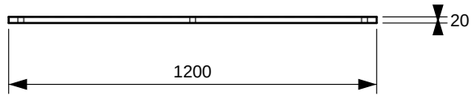

FRONT VIEW

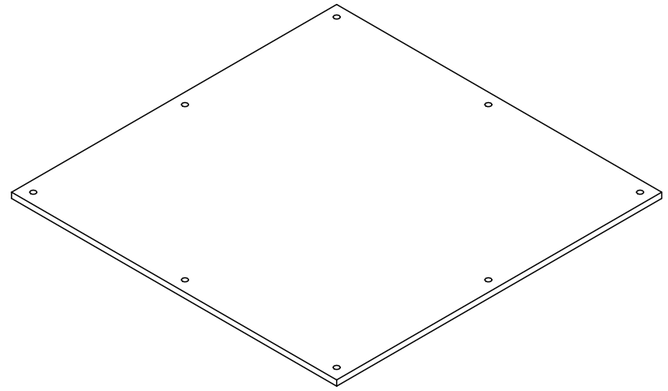

ISOMETRIC VIEW (NOT TO SCALE)

NOTES

1. Legs at 800 centres, central on the plate.
2. Anchors per anchor supplier (M16 class for Ø19 holes). Grout under after levelling.
3. Deburr all edges. Dimensions mm. Do not scale.
4. Powder coat after welding/machining; mask threads and machined faces.

QTY PER ASSEMBLY	1
STOCK	Plate 20 thk
MATERIAL	S275JR steel (assumed)
FINISH	Powder coat RAL 9005 jet black, satin

Path2 path2.io · generated from cell builder parameters

ITEM 3: FLOOR PLATE 1200 SQ X 20

Robot pedestal – detail

CONCEPT – VERIFY BEFORE MANUFACTURE

DRAWING NO	**P2-PEDESTAL-900X900X500/03**
SCALE	**1:20 @ A3**
UNITS	**mm Third angle**
FINISH	**RAL 9005 black**
DATE	**2026-11-26**
SHEET	**4 of 4**